KIVA SYSTEM KIVA KILO

USER MANUAL

VERSION 3.0

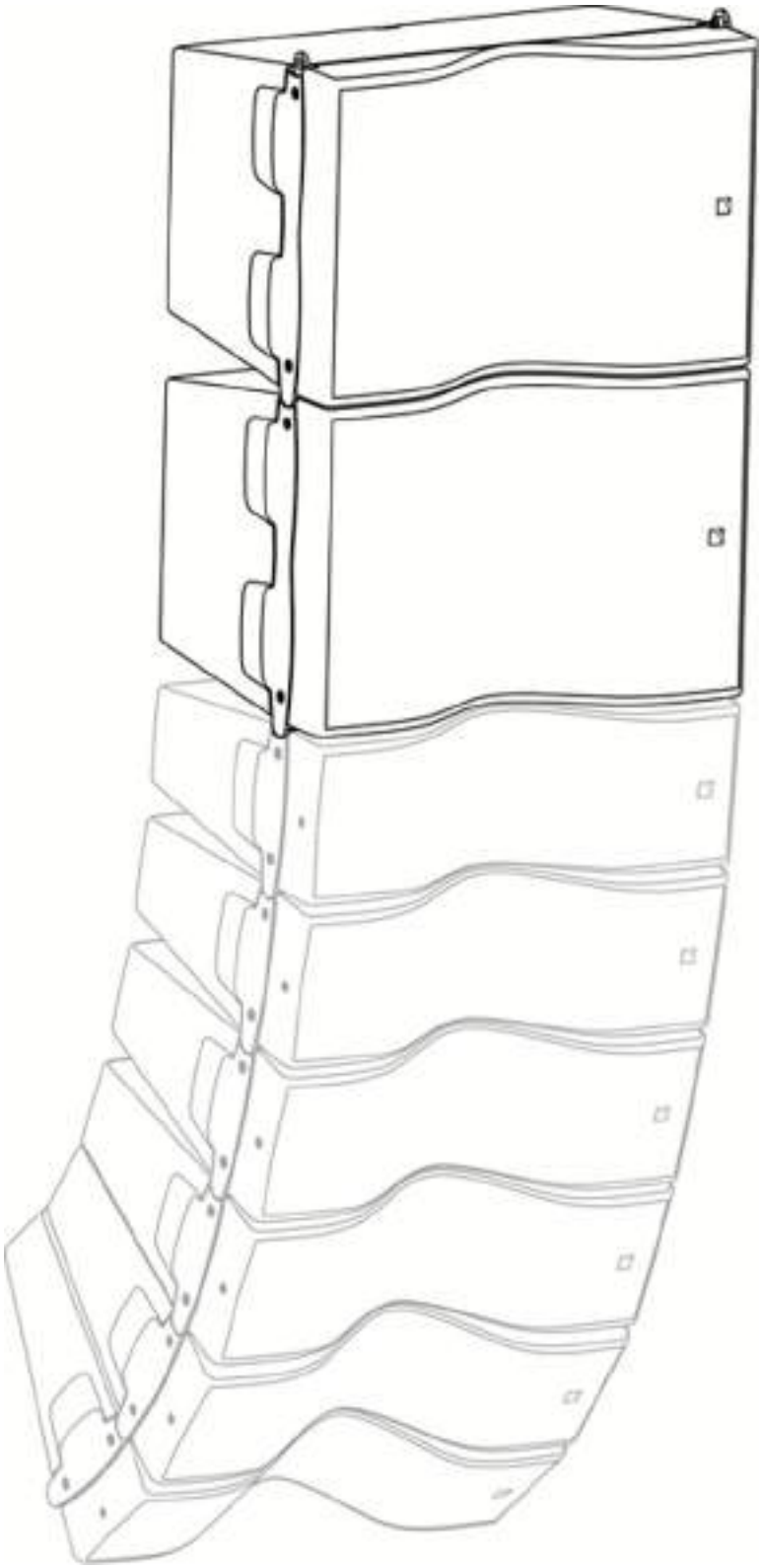

SAFETY INSTRUCTIONS

1. **Read this manual**
2. **Heed all SAFETY INSTRUCTIONS as well as DANGER and OBLIGATION warnings**
3. **Never incorporate equipment or accessories not approved by L-ACOUSTICS®**
4. **Read all the related PRODUCT INFORMATION documents before exploiting the system**
   The product information document is included in the shipping carton of the related system component.
5. **Inspect the system before any deployment.**
   Perform safety related checks and inspections before any deployment.
   Perform preventive maintenance at least once a year.
   Insufficient upkeep of the product can void the warranty.
   If any safety issue is detected during inspection, do not use the product before performing corrective maintenance.
   Check for issues. A rigging system part or fastener is missing or loose. A rigging system part exhibits: bends, breaks, broken parts, corrosion, cracks, cracks in welded joints, deformation, denting, wear, holes. A safety cue or label is missing.
6. **Read the RIGGING MANUAL before installing the system**
   Use the rigging accessories described in the rigging manual and follow the associated procedures
7. **Beware of sound levels**
   Do not stay within close proximity of loudspeakers in operation and consider wearing earplugs.
   Loudspeaker systems are capable of producing very high sound pressure levels (SPL) which can instantaneously lead to permanent hearing damage to performers, production crew and audience members. Hearing damage can also occur with prolonged exposure to sound: 8 h at 90 dB(A), 30 min at 110 dB(A), less than 4 min at 130 dB(A).

SYMBOLS

The following symbols are used in this document:

DANGER
This symbol indicates a potential risk of harm to an individual or damage to the product.
It can also notify the user about instructions that must be strictly followed to ensure safe installation or operation of the product.

OBLIGATION
This symbol notifies the user about instructions that must be strictly followed to ensure proper installation or operation of the product.

INFORMATION
This symbol notifies the user about complementary information or optional instructions.

WELCOME TO L-ACOUSTICS®

Thank you for choosing the L-ACOUSTICS® **KIVA KILO SYSTEM**.

This document contains essential information on using the system properly. Carefully read this document in order to become familiar with the system.

As part of a continuous evolution of techniques and standards, L-ACOUSTICS® reserves the right to change the specifications of its products and the content of its document without prior notice.

Please check the L-ACOUSTICS® web site on a regular basis to download the latest document and software updates: www.l-acoustics.com.

CONTENTS

KIVA KILO SYSTEM 4

1 SYSTEM COMPONENTS 5

1.1 Loudspeaker enclosure 5

1.2 Powering and driving system 5

1.3 Loudspeaker cables 5

1.4 Rigging element 5

1.5 Software application 5

2 LOUDSPEAKER CONFIGURATIONS 7

2.1 Line source 7

Standalone KIVA line source 7

2.2 Line source with low-frequency element 8

KIVA/KILO line source 8

KIVA/KILO line source with SB18 subwoofer 9

2.3 Line source element 10

Standalone KIVA line source 10

3 LOUDSPEAKER CONNECTION 11

3.1 Connectors 11

3.2 Connection to LA4 / LA4X 12

3.3 Connection to LA8 16

APPENDIX A PRESET DESCRIPTION 20

[KIVA] 20

[KIVA_FI] 20

[KIVA_KILO] 20

[KILO] 20

[SB18_60] 21

[SB18_60_C] 21

APPENDIX B RECOMMANDATION FOR SPEAKER CABLES 22

APPENDIX C SPECIFICATIONS 23

KIVA 23

KILO 24

KIVA KILO SYSTEM

The L-ACOUSTICS® KIVA KILO SYSTEM is a reference in line source technology. Packaged in a sleek fully integrated ultra-compact design, it fulfills the highest demands of both the fixed installation and rental production markets and provides the audio professionals with the ultimate performance level in its category. Utilizing the unrivalled characteristics of WST® (Wavefront Sculpture Technology), the KIVA KILO system delivers clarity, precision, and a unique proximity effect, for the audience to enjoy an incomparable listening experience.

The main system components are as follows:

- KIVA, full-range element, operating from 80 to 20 kHz;
- KILO, low-frequency element, operating down to 50 Hz;
- LA4, LA4X or LA8 amplified controller.

The KIVA line source delivers a considerable number of improvements over the traditional sound reinforcement approach, particularly with regard to the intelligibility and overall clarity of vocal material.

The KIVA line source, although compact by design, allows even coverage of extremely large acoustic environments where the number of elements (height of the array) constitutes the main factor in establishing the system throw, coverage pattern, and directivity control parameters. With a fixed horizontal directivity of 100° and a vertical inter-element variation of up to 15°, the KIVA line source is fully configurable to match any audience geometry.

Packaged in a lightweight and compact enclosure, in addition to a virtually invisible captive rigging system, the KIVA KILO system combines extremely quick set up and system integration with significant savings on storage and handling logistics. Thanks to its compact format, the KIVA system is adapted to installation in theatres, performing art centres, concert halls, convention centres, sport facilities, and TV/Broadcast studios. Before installation, any system configuration can be acoustically and mechanically modeled with the SOUNDVISION 3D simulation software.

The LA4, LA4X and LA8 amplified controllers and their preset library constitute an extremely advanced and precise drive system for the enclosures. All L-ACOUSTICS® amplified controllers feature the L-DRIVE, a thermal and over-excursion protection circuit.

Up to 253 LA8 amplified controllers can be connected together via the Ethernet-based L-NET protocol. The LA NETWORK MANAGER software allows online remote control and monitoring of all the connected units, via a user-friendly and intuitive graphic interface, and features the Array Morphing EQ. This exclusive tool allows the engineer to quickly adjust the tonal balance of the system to reach a reference curve or to ensure consistency of the sonic signature.

1 SYSTEM COMPONENTS

The system approach developed by L-ACOUSTICS® consists in offering a global solution that guarantees the highest and most predictable level of performance at any step of loudspeaker system deployment: modeling, installation, and operation. A complete L-ACOUSTICS® system includes enclosures, amplified controllers, cables, rigging system and software applications.

1.1 Loudspeaker enclosure

KIVA	Full-range (80 Hz – 20 kHz), 2-way passive, variable curvature WST®
KILO	Dedicated low-frequency enclosure (down to 50 Hz)
SB18	Subwoofer (down to 32 Hz)

Loudspeaker system design
Sound design aspects are beyond the scope of this document. However, the various applications of the system will be based on the loudspeaker configurations presented in this document.

1.2 Powering and driving system

LA4, LA4X or LA8	Amplified controller with DSP, preset library and networking capabilities

Operating instructions
Refer to the **LA4, LA4X and LA8 user manual.**

1.3 Loudspeaker cables

DO cables (DO.7, DO10, DO25)	8-point PA-COM® loudspeaker cables (4 mm² section). Respective lengths of 0.7 m/2.3 ft, 10 m/32.8 ft, and 25 m/82 ft.
DOSUB-LA8	Breakout cable for four passive enclosures. 8-point PA-COM® to 4 × 2-point SpeakON® (4 mm² section).
SP cables (SP.7, SP5, SP10, SP25)	4-point SpeakON® loudspeaker cables (4 mm² section). Respective lengths of 0.7 m/2.3 ft, 5 m/16.4 ft, 10 m/32.8 ft and 25 m/82 ft.
SP-Y1	Breakout cable for two passive enclosures. 4-point SpeakON® to 2 × 2-point SpeakON® (2.5 mm² section). Provided with CC4FP adapter.

Information about the connection of the enclosures to the LA amplifiers is given in this document.
Refer to the **LA4, LA4X** and **LA8 user manuals** for detailed instructions about the whole cabling scheme, including modulation cables and network.

1.4 Rigging element

Rigging elements or procedures are not presented in this document.
Refer to the **KIVA KILO SYSTEM rigging manual**.

1.5 Software application

SOUNDVISION	Proprietary acoustical and mechanical 3D modeling software.
LA NETWORK MANAGER	Remote control and monitoring of amplified controllers

Using L-ACOUSTICS® software
Refer to the **SOUNDVISION user manual** and the **LA NETWORK MANAGER tutorial**.

KIVA

SB18

KILO

CC4FP

LA4

LA4

SPY1

SP7

LA8

DO.7

SP5

DO10

SP10

DO3WFILL

DO25

SP25

DOSUB-LA8

SOUNDVISION

LA Network Manager

KIVA KILO system components (excluding rigging elements and modulation cables)

2 LOUDSPEAKER CONFIGURATIONS

2.1 Line source

In this configuration – where a KIVA line source is used alone – the system operates over the nominal bandwidth of the enclosure.

The [KIVA] preset allows for a reference frequency response in medium to long throw applications.

This configuration is driven by the LA4, LA4X or LA8 amplified controller.

Standalone KIVA line source

Enclosure	[PRESET]
KIVA	▶ **[KIVA]**

Frequency range (-10 dB)

80 Hz – 20 kHz

2.2 Line source with low-frequency element

In this configuration – where a KIVA line source is used with the KILO low-extension and optional SB18 subwoofers – the bandwidth of the KIVA system is extended in the low-end.

The [KIVA] preset allows for a reference frequency response in medium to long throw applications.

The [KILO] preset provides a 100 Hz upper frequency limit for the KILO.

The [KIVA_KILO] preset combines the [KIVA] and [KILO] presets to facilitate the use of this configuration.

The [SB18_60] preset provides a 60 Hz upper frequency limit for the SB18.

This configuration is driven by the LA4, LA4X or LA8 amplified controller.

KIVA/KILO line source

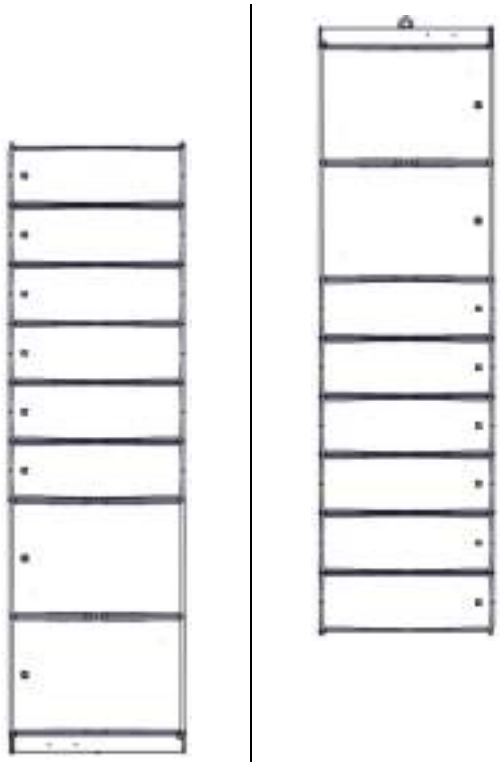

Enclosure	[PRESET]
KIVA + KILO	▶ **[KIVA_KILO]**
Or	
KIVA	▶ **[KIVA]**
KILO	▶ **[KILO]**

Frequency range (-10 dB)

50 Hz – 20 kHz

Recommended ratio

3 KIVA : 1 KILO

Delay settings

When combining a line source with subwoofers, delays may have to be added to the presets.

Refer to the **LA4, LA4X** or **LA8 PRESET LIBRARY user manual** to obtain the pre-alignment delay values.

The [KIVA_KILO] hybrid preset does not allow delay or polarity definition for the subwoofer output channel.

When delay or polarity need to be defined for this channel, it is necessary to build a custom preset with the [KIVA] and [KILO] presets.

Refer to the **LA NETWORK MANAGER tutorial** for detailed instructions

KIVA/KILO line source with SB18 subwoofer

Enclosure	[PRESET]
KIVA + KILO	▶ **[KIVA_KILO]**
SB18	▶ **[SB18_60]**

Or

KIVA	▶ **[KIVA]**
KILO	▶ **[KILO]**
SB18	▶ **[SB18_60]**

Frequency range (-10 dB)

32 Hz – 20 kHz

Recommended ratio

3 KIVA : 1 KILO : 1 SB18

Delay settings

When combining a line source with subwoofers, delays may have to be added to the presets.

Refer to the **LA4, LA4X** or **LA8 PRESET LIBRARY user manual** to obtain the pre-alignment delay values.

The [KIVA_KILO] hybrid preset does not allow delay or polarity definition for the subwoofer output channel.

When delay or polarity need to be defined for this channel, it is necessary to build a custom preset with the [KIVA] and [KILO] presets.

Refer to the **LA NETWORK MANAGER tutorial** for detailed instructions

Use [SB18_60_C] with a SB18 subwoofer array in cardioid configuration

The cardioid configuration consists in reversing 1 element in an array of 4 subwoofers.

Refer to the **SB18 user manual** for details about the CARDIOID mode.

2.3 Line source element

In this configuration – where one or two KIVA enclosures are used without complementary subwoofers – the system operates over the nominal bandwidth of the enclosure.

The [KIVA_FI] preset allows for a reference frequency response in short throw applications.

This configuration is driven by the LA4, LA4X or LA8 amplified controller.

One or two KIVA enclosures

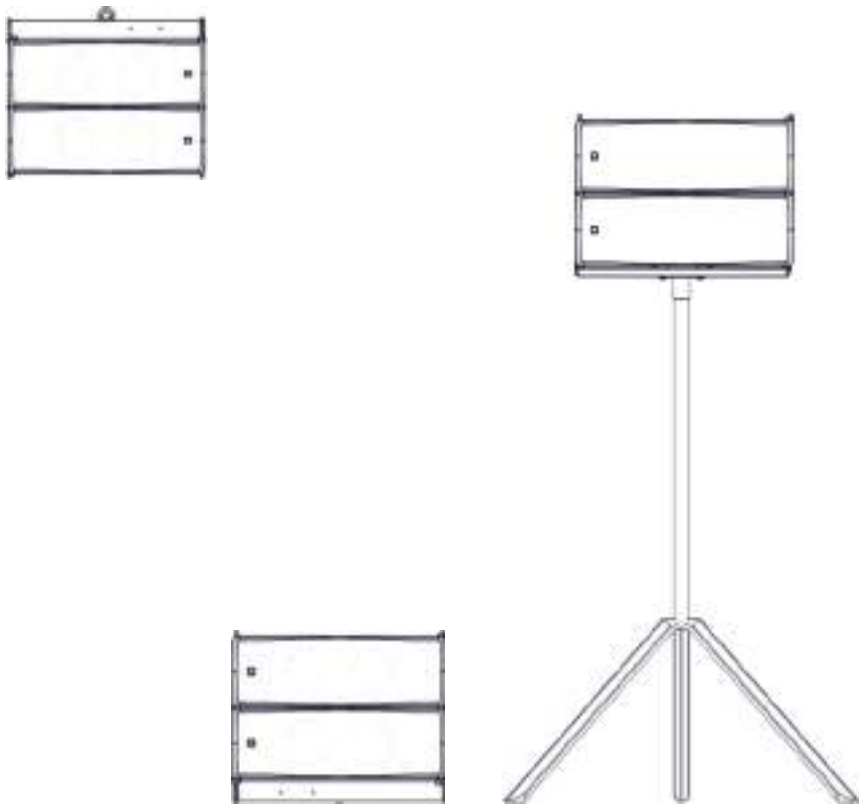

Enclosure	[PRESET]
KIVA	▶ **[KIVA_FI]**

Frequency range (-10 dB)

80 Hz – 20 kHz

3 LOUDSPEAKER CONNECTION

3.1 Connectors

The KIVA and the KILO enclosures are equipped with two 4-point SpeakON® connectors wired in parallel. The IN connector allows receiving the audio signals, whereas the LINK connector allows routing them to another similar enclosure in parallel.

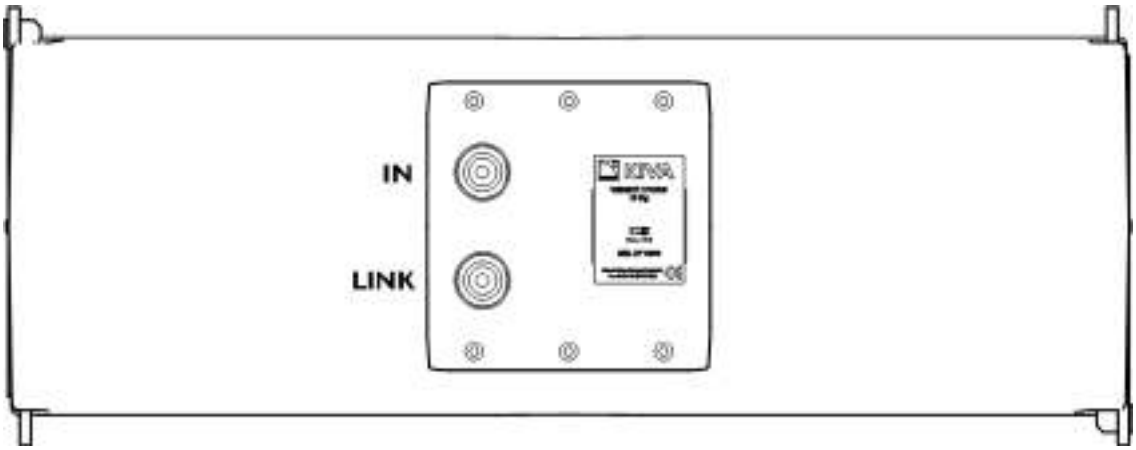

KIVA

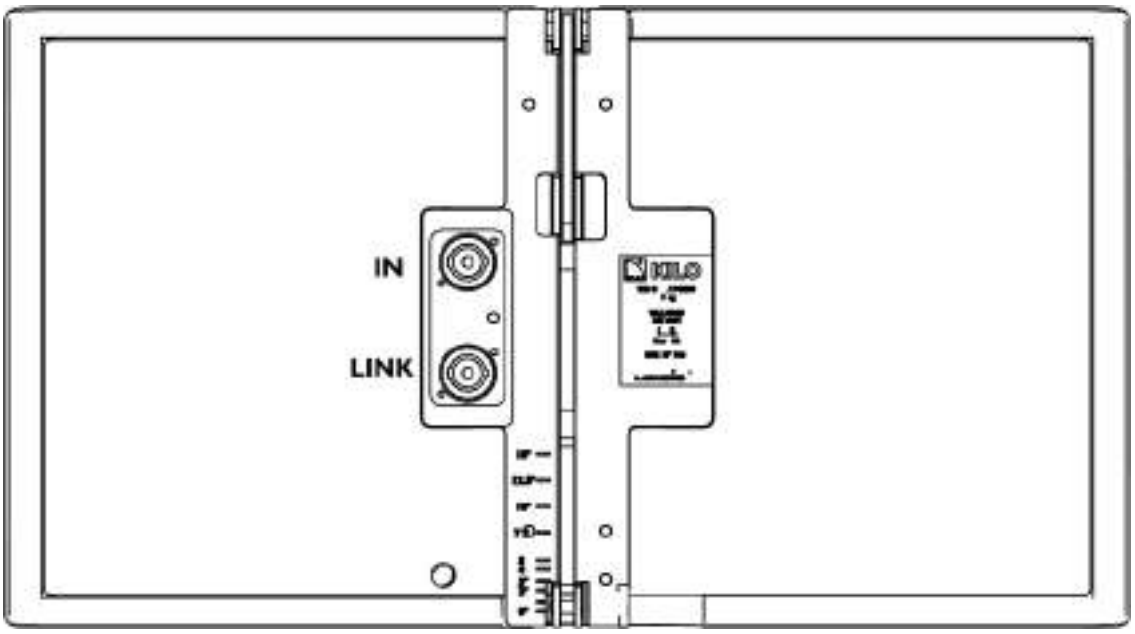

KILO

Internal pinout for L-ACOUSTICS® KIVA and KILO enclosures

SpeakON® points	1 +	1 -	2 +	2 -
Transducer connectors	IN +	IN -	Not used	Not used

3.2 Connection to LA4 / LA4X

Maximum of enclosures per LA4 / LA4X
Two KIVA, two KILO, in parallel, or one SB18 enclosures can be connected to each output channel on the LA4 / LA4X. Therefore, a single LA4 / LA4X amplified controller can drive up to :

- 8 × KIVA or
- 8 × KILO or
- 6 × KIVA and 2 × KILO or
- 4 × SB18m.

Impedance load
8 Ω for 1 enclosure, 4 Ω for 2 enclosures in parallel.

Option A

▶ Use **SP cables** (SP.7, SP5, SP10 or SP25) to connect first enclosures to the four LA4 / LA4X output channels.
▶ If necessary, use **SP cables** to connect additional KIVA enclosures in parallel with the first ones.

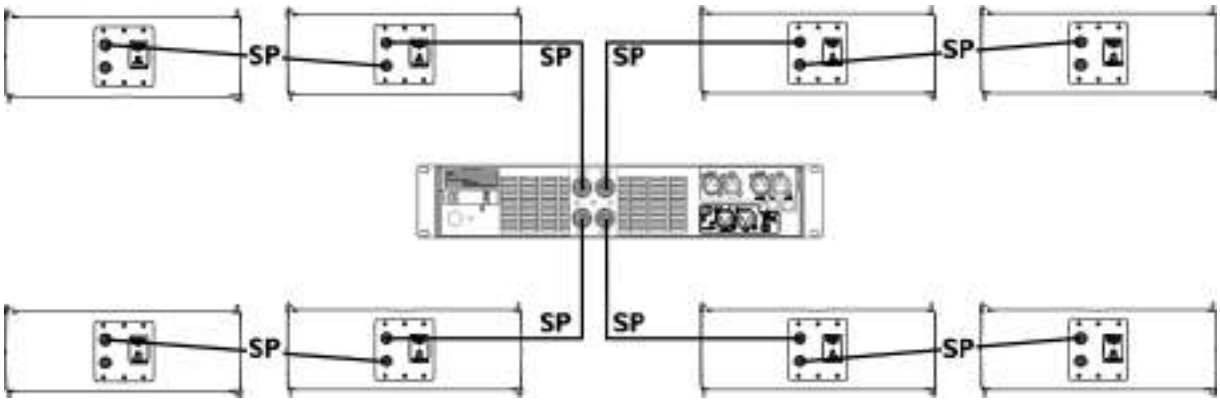

LA4 / LA4X option A maximum configuration with KIVA

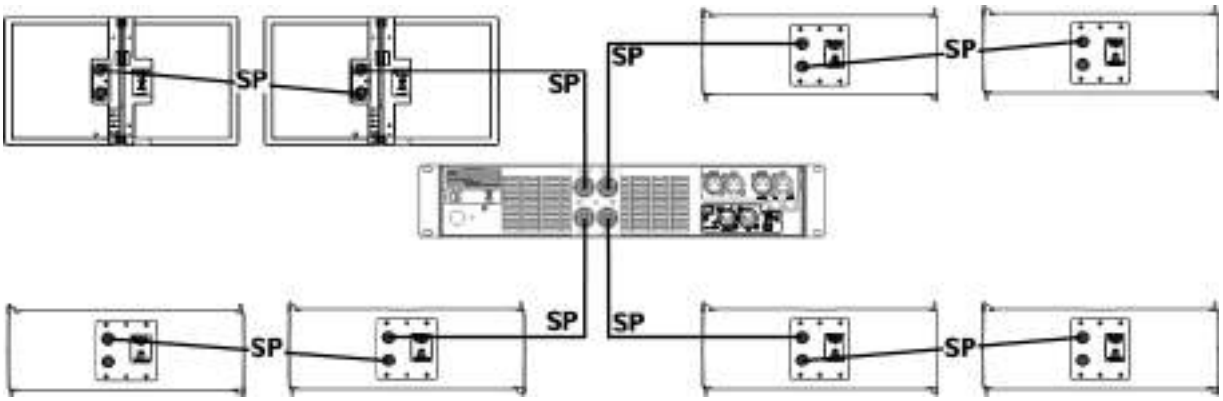

LA4 / LA4X option A maximum configuration with KIVA and KILO

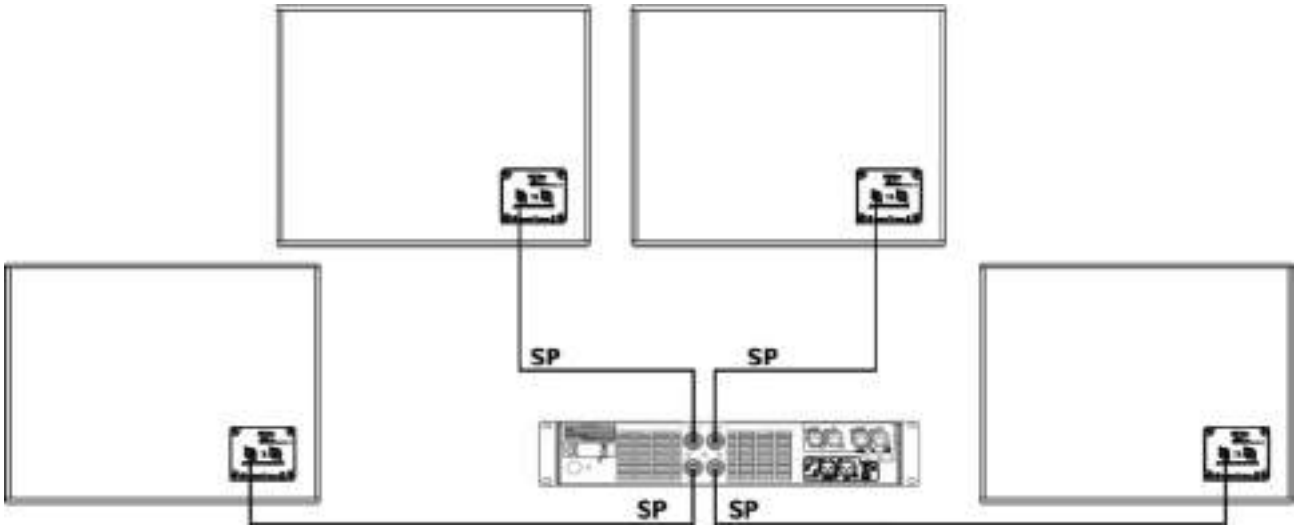

LA4 / LA4X option A maximum configuration with SB18

Option B

- Connect an **SP cable** (SP.7, SP5, SP10 or SP25) to the OUT1/OUT2 and OUT3/OUT4 connectors of the LA4 / LA4X.
- Use a **CC4FP adapter** to connect an **SP-Y1 cable** and separate the two output channels.
- If necessary, use **SP cables** to connect additional KIVA enclosures in parallel with the first ones.

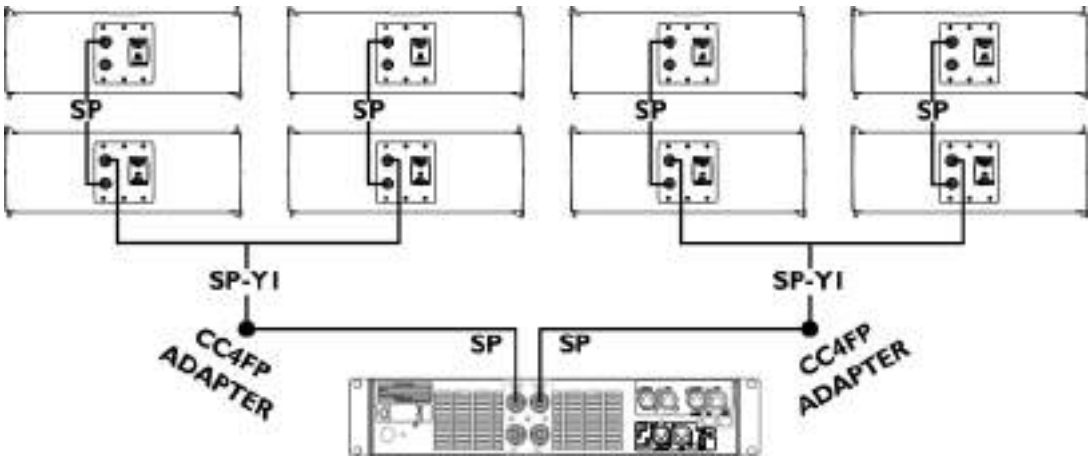

LA4 / LA4X option B maximum configuration with KIVA

KILO on SP-Y1 *CH (1)* connector
Always connect the *CH (1)* connector of the SP-Y1 cable to the KILO enclosure when using this cabling scheme with the [KIVA-KILO] preset.

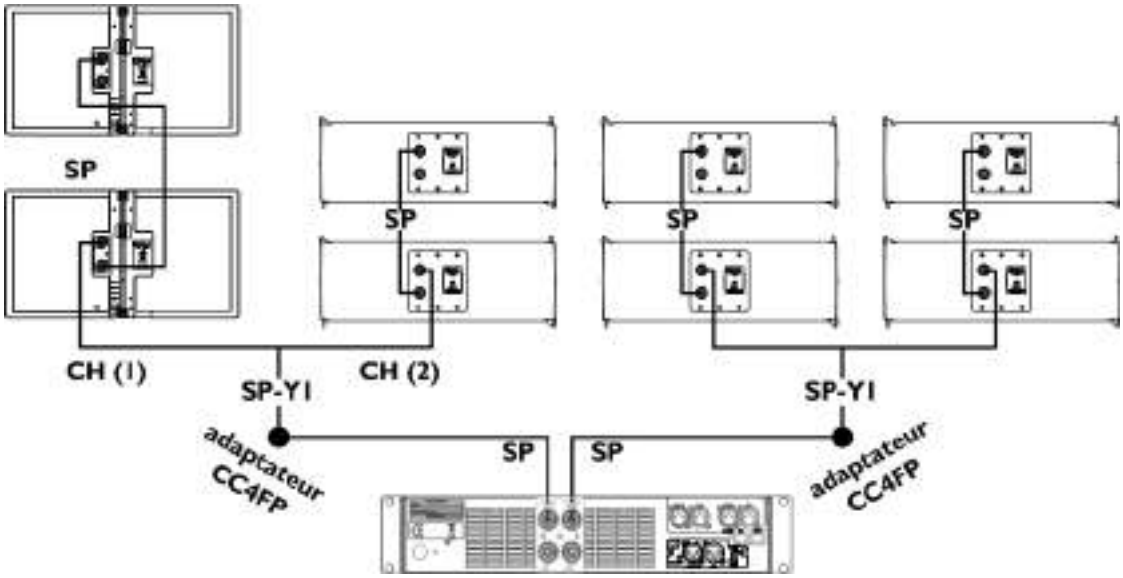

LA4 / LA4X option B maximum configuration with KIVA and KILO

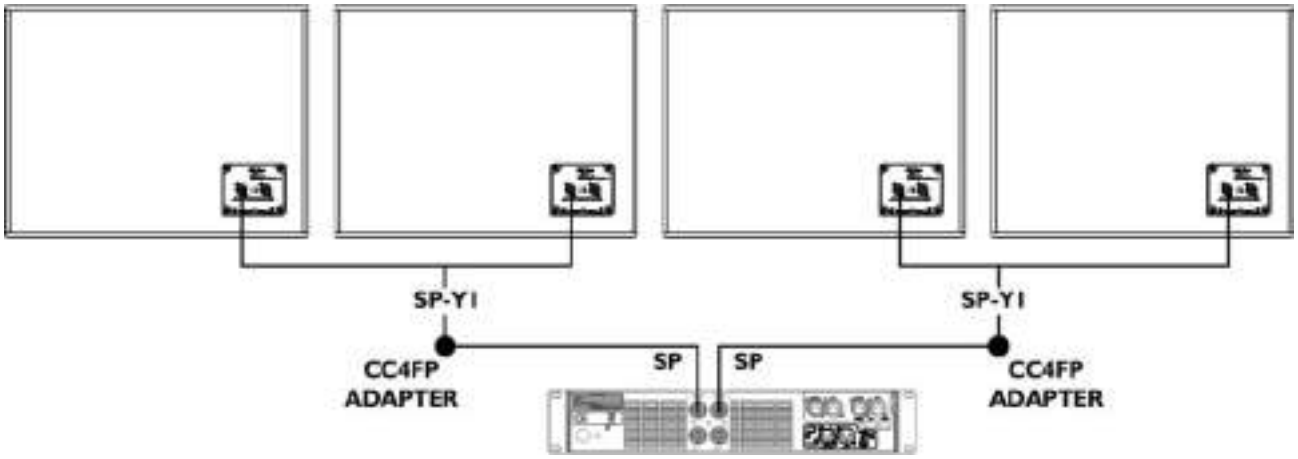

LA4 / LA4X option B maximum configuration with SB18

3.3 Connection to LA8

Maximum of enclosures per LA8
Three KIVA, three KILO or two SB18 enclosures can be connected in parallel to each output channel on the LA8. Therefore, a single LA8 amplified controller can drive up to :

- 12 × KIVA or
- 12 × KILO or
- 9 × KIVA and 3 × KILO or
- 8 × SB18m.

Impedance load
8 Ω for 1 enclosure, 4 Ω for 2 enclosures, 2.7 Ω for 3 enclosures

Option A

▶ Connect a **DO cable** (DO.7, DO10 or DO25) to the LA8 PA-COM® connector
▶ Use the **DOSUB-LA8** to separate the four output channels.
▶ If necessary, use **SP cables** to connect additional similar enclosures in parallel with the first ones.

Corresponding DOSUB-LA8 SpeakON® points and LA8 output channels:

SPK1 = OUT 1	SPK3 = OUT 3
SPK2 = OUT 2	SPK4 = OUT 4

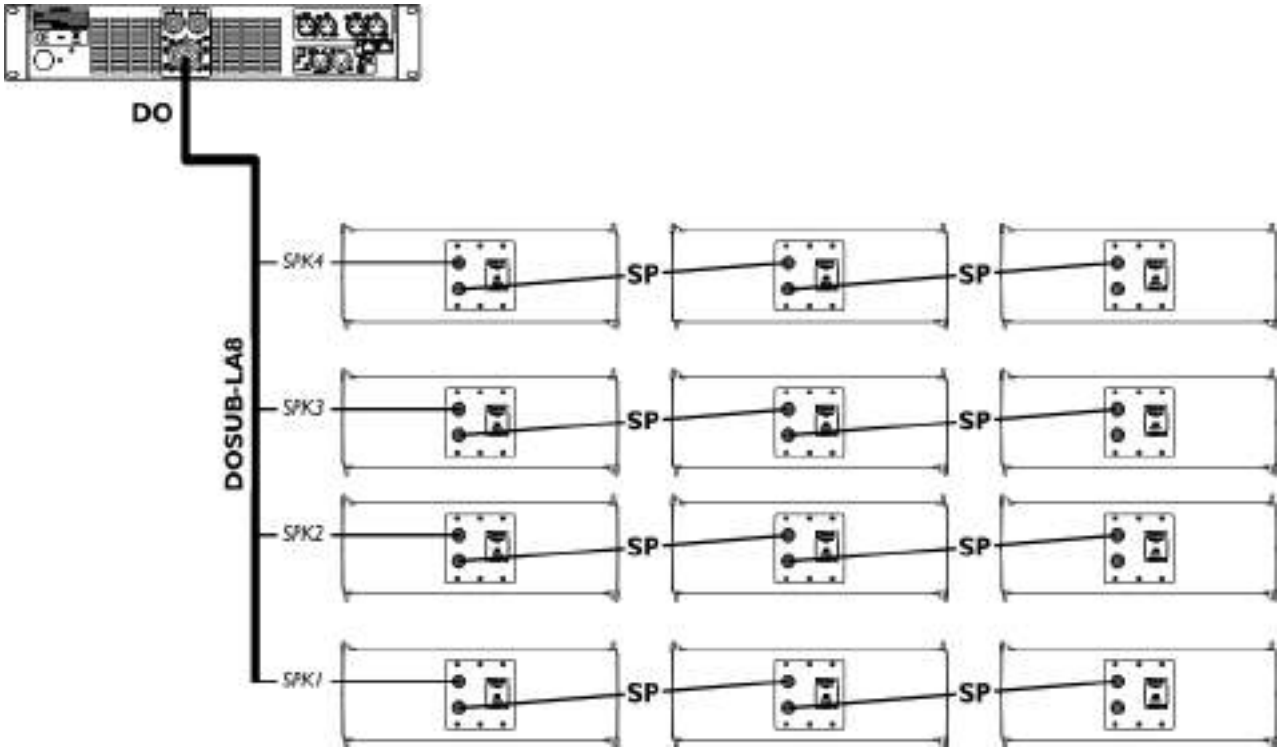

LA8 option A maximum configuration with KIVA

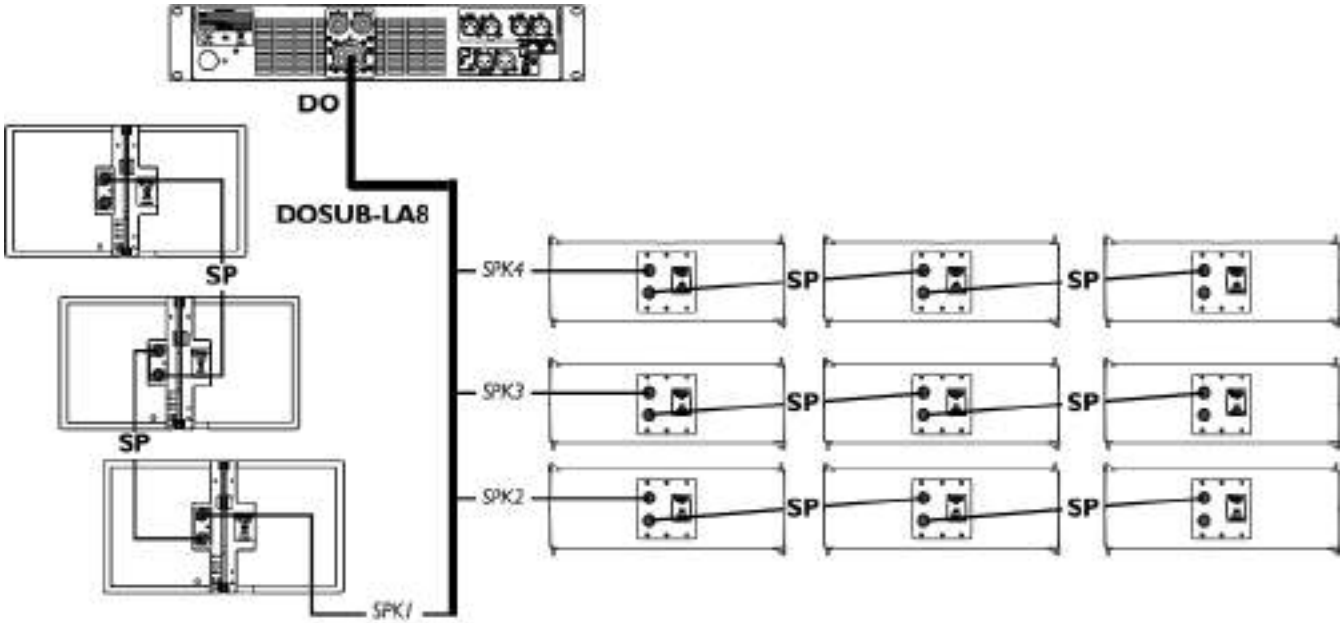

LA8 option A maximum configuration with KIVA and KILO

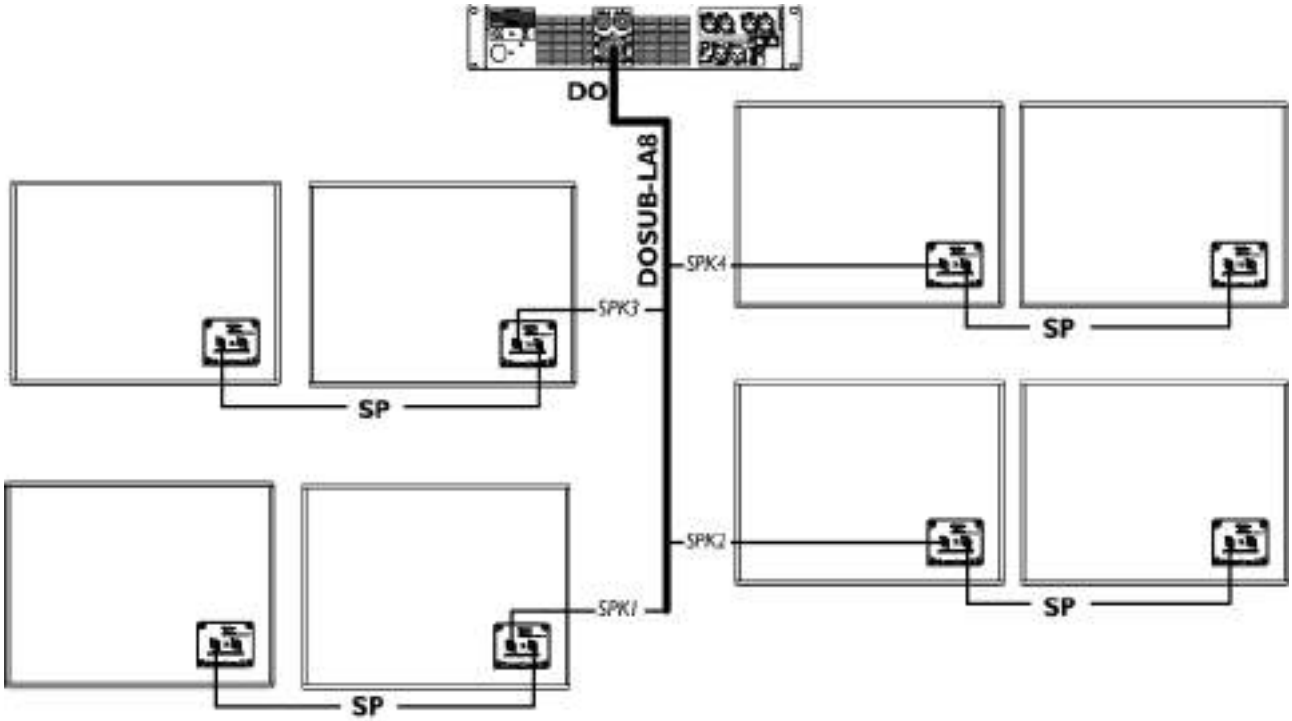

LA8 option A maximum configuration with SB18

Option B

▶ Connect an **SP** cable (SP.7, SP5, SP10 or SP25) to the OUT1/OUT2 and OUT3/OUT4 LA8 SpeakON® connectors.
▶ Use a **CC4FP adapter** to connect an **SP-Y1** cable and separate the two output channels.
▶ If necessary, use **SP cables** to connect additional similar enclosures in parallel with the first ones.

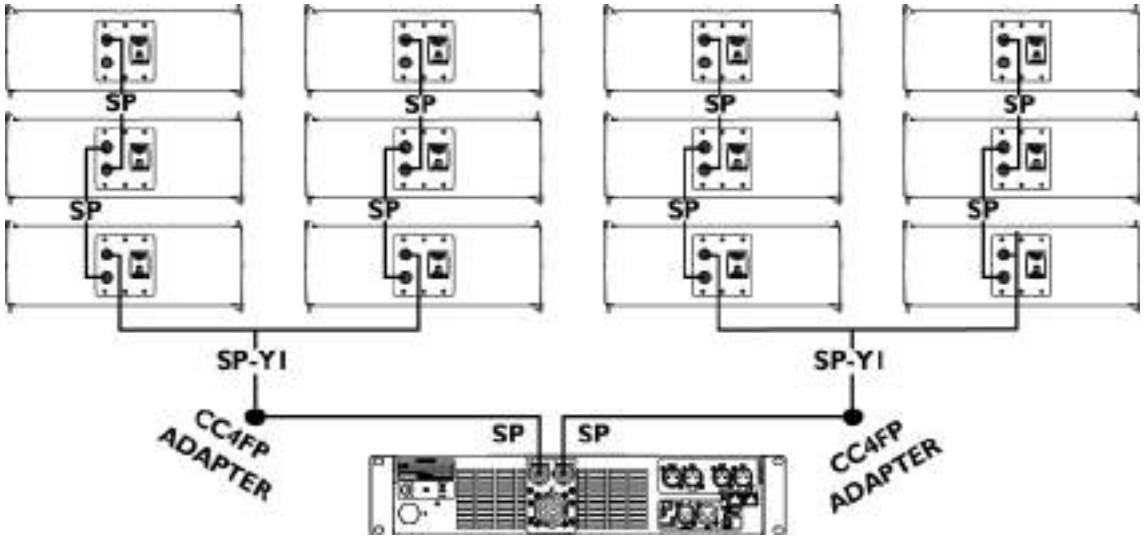

LA8 option B maximum configuration with KIVA

KILO on SP-Y1 *CH (1)* connector
Always connect the *CH (1)* connector of the SP-Y1 cable to the KILO enclosure when using this cabling scheme with the [KIVA-KILO] preset.

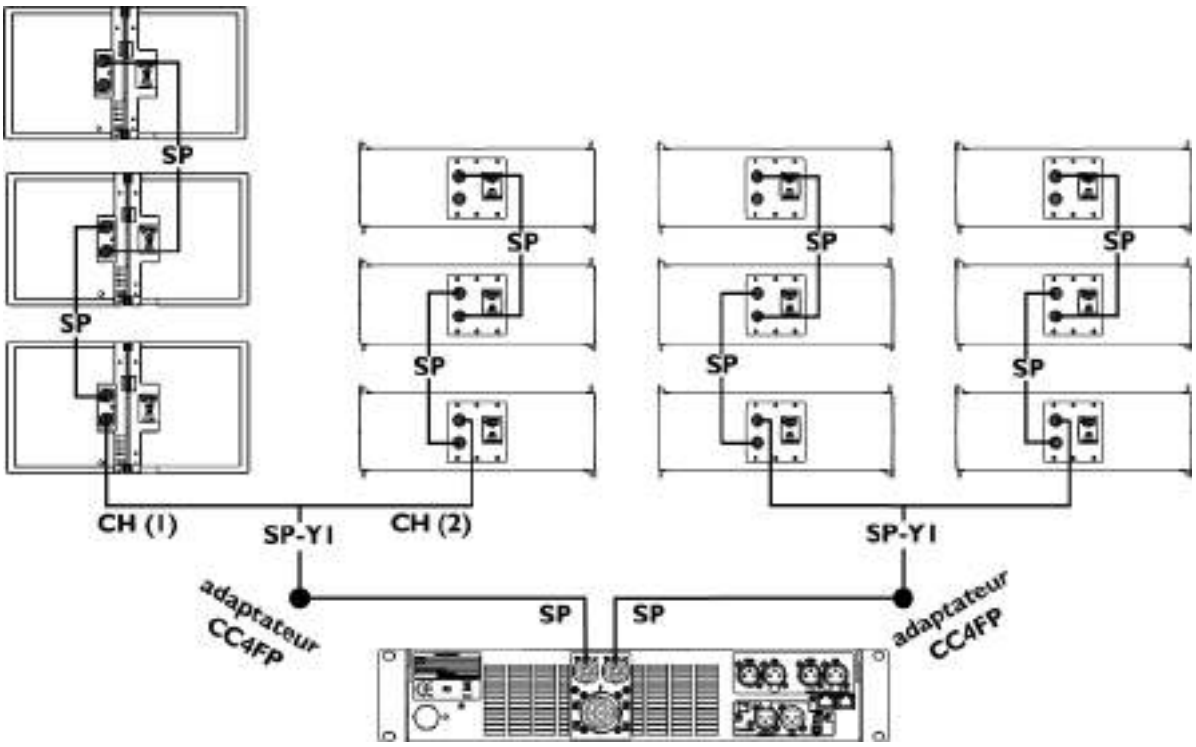

LA8 option B maximum configuration with KIVA and KILO

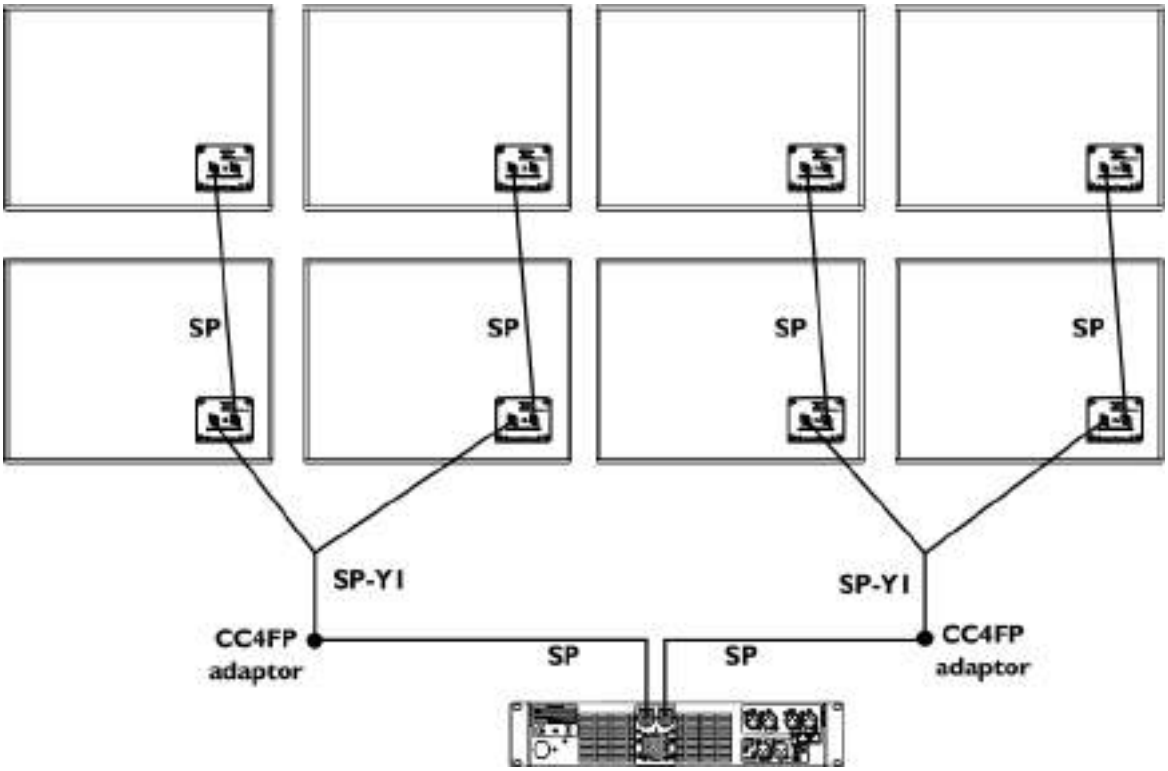

LA8 option B maximum configuration with SB18

APPENDIX A PRESET DESCRIPTION

For more information about the presets (design, pre-alignment values, acoustic properties) refer to the **LA4-LA8 Preset guide**.

[KIVA]

The [KIVA] preset allows for a reference frequency response in medium to long throw applications.

Loudspeaker elements	Amplifier outputs	Channels	Default parameters				
			Routing	Gain	Delay	Polarity	Mute
KIVA	OUT 1	PA	IN A	0 dB	0 ms	+	ON
KIVA	OUT 2	PA	IN A	0 dB	0 ms	+	ON
KIVA	OUT 3	PA	IN A	0 dB	0 ms	+	ON
KIVA	OUT 4	PA	IN A	0 dB	0 ms	+	ON

* A, B: channel A or B PA: passive output

[KIVA_FI]

The [KIVA_FI] preset allows for a reference frequency response in short throw applications.

Loudspeaker elements	Amplifier outputs	Channels	Default parameters				
			Routing	Gain	Delay	Polarity	Mute
KIVA	OUT 1	PA	IN A	0 dB	0 ms	+	ON
KIVA	OUT 2	PA	IN A	0 dB	0 ms	+	ON
KIVA	OUT 3	PA	IN B	0 dB	0 ms	+	ON
KIVA	OUT 4	PA	IN B	0 dB	0 ms	+	ON

* A, B: channel A or B PA: passive output

[KIVA_KILO]

The [KIVA_KILO] preset combines the [KIVA] and [KILO] presets to facilitate the use of this configuration.

Loudspeaker elements	Amplifier outputs	Channels	Default parameters				
			Routing	Gain	Delay	Polarity	Mute
KILO	OUT 1	LF	IN A	0 dB	0 ms	+	ON
KIVA	OUT 2	PA					ON
KIVA	OUT 3	PA					ON
KIVA	OUT 4	PA					ON

* A, B: channel A or B LF: low-frequency output PA: passive output

[KILO]

The [KILO] preset provides a 100 Hz upper frequency limit for the KILO.

Loudspeaker elements	Amplifier outputs	Channels	Default parameters				
			Routing	Gain	Delay	Polarity	Mute
KILO	OUT 1	SB	IN A	0 dB	0 ms	+	ON
KILO	OUT 2	SB	IN A	0 dB	0 ms	+	ON
KILO	OUT 3	SB	IN B	0 dB	0 ms	+	ON
KILO	OUT 4	SB	IN B	0 dB	0 ms	+	ON

* A, B: channel A or B SB: subwoofer output

[SB18_60]

The [SB18_60] preset provides a 60 Hz upper frequency limit for the SB18.

Loudspeaker elements	Amplifier outputs	Channels	Default parameters				
			Routing	Gain	Delay	Polarity	Mute
SB18m	OUT 1	SB	IN A	0 dB	0 ms	+	ON
SB18m	OUT 2	SB	IN A	0 dB	0 ms	+	ON
SB18m	OUT 3	SB	IN B	0 dB	0 ms	+	ON
SB18m	OUT 4	SB	IN B	0 dB	0 ms	+	ON

* A, B: channel A or B SB: subwoofer output

[SB18_60_C]

The [SB18_60_C] preset provides a 60 Hz upper frequency limit for the SB18.
It feature optimized delay settings for subwoofers arrays in cardioid configuration.

Loudspeaker elements	Amplifier outputs	Channels	Default parameters				
			Routing	Gain	Delay	Polarity	Mute
Reversed SB18m	OUT 1	SR	IN A	0 dB	0 ms	+	ON
SB18m	OUT 2	SB					ON
SB18m	OUT 3	SB					ON
SB18m	OUT 4	SB					ON

* A, B: channel A or B SB: subwoofer output SR: reversed subwoofer output

APPENDIX B RECOMMANDATION FOR SPEAKER CABLES

Cable quality and resistance
Only use high-quality fully insulated speaker cables made of stranded copper wire.
Use cables of gauge offering low resistance per unit length and keep the cables as short as possible.

The following table provides the recommended maximum length depending on the cable cross-section and on the impedance load connected to the amplifier.

			Recommended maximum length					
Cable cross-section			**8 Ω load**		**4 Ω load**		**2.7 Ω load**	
mm²	**SWG**	**AWG**	**m**	**ft**	**m**	**ft**	**m**	**ft**
2.5	15	13	30	100	15	50	10	33
4	13	11	50	160	25	80	17	53
6	11	9	74	240	37	120	25	80
10	9	7	120	390	60	195	40	130

APPENDIX C SPECIFICATIONS

KIVA

Description	2-way passive enclosure, amplified by LA4X or LA8	
Usable bandwidth (-10 dB)	80 Hz - 20 kHz ([KIVA] preset)	
Maximum SPL[1]	130 dB ([KIVA] preset)	
Coverage angle (-6 dB)	Horizontal: 100° (from 500 Hz)	
	Vertical: depends on the number of elements and array curvature	
Transducers	LF: 2 × 6.5" , weather-resistant , bass-reflex	
	HF: 1 × 1.5" , diaphragm compression driver, DOSC® waveguide	
Nominal impedance	8 Ω	
RMS power handling	120 W	
Connectors	IN: 1 × 4-point SpeakON®	LINK: 1 × 4-point SpeakON®
Rigging components	Captive 3-point rigging system Inter-enclosure angles: 0, 1, 2, 3, 4, 5, 7.5, 10, 12.5 or 15°	
Dimensions	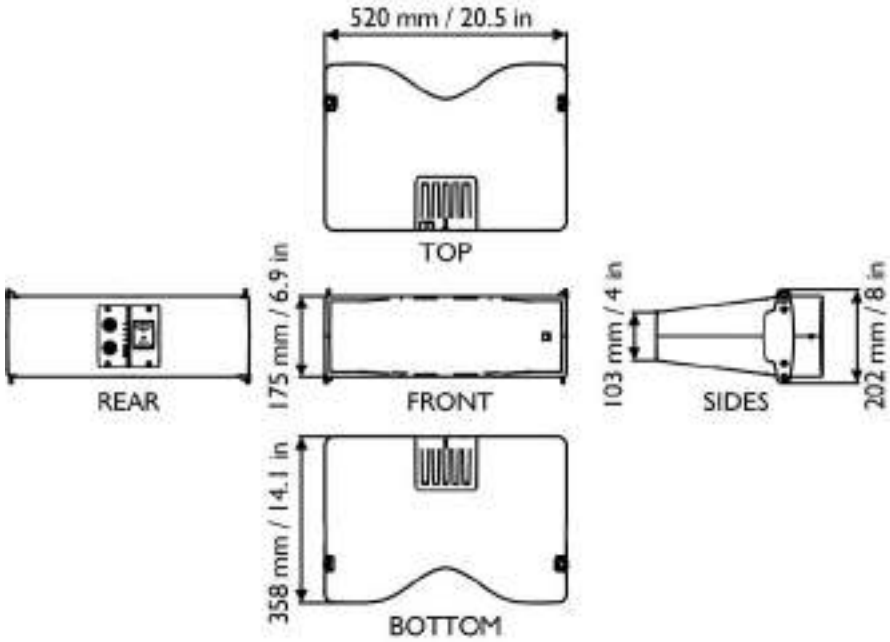	
Physical data	**Weight (net):**	13 kg / 28.7 lb
	Cabinet: **Back plate:**	Composite sandwich structure ZAMAC
	Finish:	Dark grey Brown (Pantone 426C) Pure white (RAL 9010®) Custom RAL code on special order
	Front:	Plastic grill with anti-corrosion coating Airnet® acoustically neutral fabric
	Rigging components:	High strength steel with anti-corrosion coating

1 Peak level at 1 m under free field conditions using 10 dB crest factor pink noise with specified preset.

KILO

Description	Low-frequency extension for KIVA, amplified by LA4X or LA8	
Low frequency limit (-10 dB)	50 Hz ([KIVA_KILO] preset)	
Maximum SPL[1]	129 dB ([KIVA_KILO] preset)	
RMS power handling	310 W	
Transducer	1 x 12" neodymium weather-resistant transducer, dual bass-reflex	
Nominal impedance	8 Ω	
Connectors	IN: 1 × 4-point SpeakON®	LINK: 1 × 4-point SpeakON®
Rigging components	Captive 3-point rigging system Inter-enclosure angles: 0, 1, 2, 3, 4, 5, 7.5, 10, 12.5 or 15°	
Dimensions	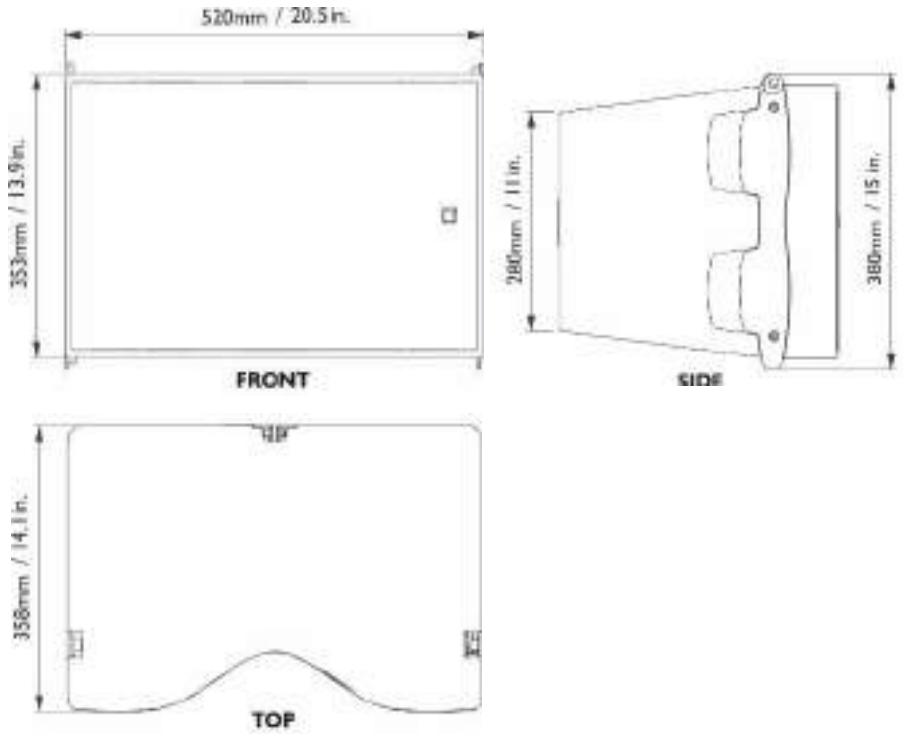	

Physical data	**Weight (net):**	19 kg / 41.9 lb
	Cabinet:	Baltic birch plywood
	Finish:	Grey brown (RAL 8019®) Pure white (RAL 9010®) Custom RAL code on special order
	Front:	Steel grill with anti-corrosion coating Airnet® acoustically neutral fabric
	Rigging components:	High strength steel with anti-corrosion coating

[1] Peak level at 1 m under free field conditions using 10 dB crest factor pink noise with specified preset.

L-Acoustics
13 rue Levacher Cintrat - 91460 Marcoussis - France
+33 1 69 63 69 63 - info@l-acoustics.com
www.l-acoustics.com

L-ACOUSTICS
GROUP